2. Specifications

2.1 Specification Sheet

Model			1.GWH12QB-K6DNB8I 2.GWH12QB-K6DNB2I 3.GWH12QB-K6DNB4I 4.GWH12QB-K6DNA1I 5.GWH12QB-K6DND6I 6.GWH12QB-K6DNA5I 7.GWH12QB-K6DNA3I 8.GWH12QB-K6DNC6I 9.GWH12QB-K6DNC4I 10.GWH12QB-K6DNC8I 11.GWH12QB-K6DNB8I 12.GWH12QB-K6DNA2I 13.GWH12QB-K6DND8I
Product Code			1.CB438006800/CB438006801 2.CB432012300 3.CB434010600/CB434010601 4.CB419015000 5.CB460005100/CB460005101 6.CB425011800/CB425011801 7.CB424006500 8.CB443005400/CB443005401 9.CB444007501 10.CB456006200 11.CB438006802 12.CB426006700/CB426006701 13.CB459005100
Power Supply	Rated Voltage	V~	220-240
	Rated Frequency	Hz	50
	Phases		1
Power Supply Mode			Outdoor
Cooling Capacity		W	3200
Heating Capacity		W	3500
Cooling Power Input		W	997
Heating Power Input		W	970
Cooling Current Input		A	4.42
Heating Current Input		A	4.30
Rated Input		W	1500
Rated Current		A	6.21
Air Flow Volume(SH/H/M/L/SL)		m^3/h	560/480/410/290/-
Dehumidifying Volume		L/h	1.4
EER		W/W	3.21
COP		W/W	3.61
SEER			6.10
SCOP(Average/Warmer/Colder)			4.00
HSPF			/
Application Area		m^2	15-22
Indoor Unit	Indoor Unit Model		1.GWH12QB-K6DNB8I/I 2.GWH12QB-K6DNB2I/I 3.GWH12QB-K6DNB4I/I 4.GWH12QB-K6DNA1I/I 5.GWH12QB-K6DND6I/I 6.GWH12QB-K6DNA5I/I 7.GWH12QB-K6DNA3I/I 8.GWH12QB-K6DNC6I/I 9.GWH12QB-K6DNC4I/I 10.GWH12QB-K6DNC8I 11.GWH12QB-K6DNB8I/I 12.GWH12QB-K6DNA2I/I 13.GWH12QB-K6DND8I/I
	Indoor Unit Product Code		1.CB438N06800/CB438N06801 2.CB432N12300 3.CB434N10600/CB434N10601 4.CB419N15000 5.CB460N05100/CB460N05101 6.CB425N11800/CB425N11801 7.CB424N06500 8.CB443N05400/CB443N05401 9.CB444N07501 10.CB456N06200 11.CB438N06802 12.CB426N06700/CB426N06701 13.CB459N05100
	Fan Type		Cross-flow
	Fan Diameter Length(DXL)	mm	Φ98X580
	Cooling Speed(SH/H/M/L/SL)	r/min	1350/1200/1050/750/-
	Heating Speed(SH/H/M/L/SL)	r/min	1350/1200/1050/850/-
	Fan Motor Power Output	W	20
	Fan Motor RLA	A	0.215
	Fan Motor Capacitor	μF	1
	Evaporator Form		Aluminum Fin-copper Tube
	Evaporator Pipe Diameter	mm	Φ5
	Evaporator Row-fin Gap	mm	2-1.4
	Evaporator Coil Length(LXDXW)	mm	584X22.8X266.7
	Swing Motor Model		MP24AA
	Swing Motor Power Output	W	1.5
	Fuse Current	A	3.15
	Sound Pressure Level(SH/H/M/L/SL)	dB (A)	41/37/33/25/-
	Sound Power Level(SH/H/M/L/SL)	dB (A)	55/47/43/35/-
	Dimension(WXHXD)	mm	790X275X200
	Dimension of Carton Box(LXWXH)	mm	863X268X352
	Dimension of Package(LXWXH)	mm	866X271X367
	Net Weight	kg	9
	Gross Weight	kg	11

Outdoor Unit	Model of Outdoor Unit		GWH12QB-K6DNB8I/O
	Product Code of Outdoor Unit		CB438W06800
	Compressor Manufacturer/Trademark		ZHUHAI LANDA COMPRESSOR CO., LTD
	Compressor Model		QXF-B096zE190A
	Compressor Oil		FW68DA
	Compressor Type		Rotary
	L.R.A.	A	20.0
	Compressor RLA	A	4.21
	Compressor Power Input	W	943
	Overload Protector		1NT11L-6233
	Throttling Method		Capillary
	Operation temp	°C	16~30
	Ambient temp (cooling)	°C	-15~43
	Ambient temp (heating)	°C	-15~24
	Condenser Form		Aluminum Fin-copper Tube
	Pipe Diameter	mm	Φ7.94
	Rows-fin Gap	mm	1-1.4
	Coil Length (LXDXW)	mm	731X19.05X550
	Fan Motor Speed	rpm	900
	Output of Fan Motor	W	30
	Fan Motor RLA	A	0.36
	Fan Motor Capacitor	μF	/
	Air Flow Volume of Outdoor Unit	m^3/h	2200
	Fan Type		Axial-flow
	Fan Diameter	mm	Φ438
	Defrosting Method		Automatic Defrosting
	Climate Type		T1
	Isolation		I
	Moisture Protection		IPX4
	Permissible Excessive Operating Pressure for the Discharge Side	MPa	4.3
	Permissible Excessive Operating Pressure for the Suction Side	MPa	2.5
	Sound Pressure Level (H/M/L)	dB (A)	52/-/-
	Sound Power Level (H/M/L)	dB (A)	62/-/-
	Dimension (WXHXD)	mm	848X596X320
	Dimension of Carton Box (LXWXH)	mm	878X360X630
	Dimension of Package (LXWXH)	mm	881X363X645
	Net Weight	kg	31
	Gross Weight	kg	34
	Refrigerant		R32
	Refrigerant Charge	kg	0.59
Connection Pipe	Length	m	5
	Gas Additional Charge	g/m	16
	Outer Diameter Liquid Pipe	mm	Φ6
	Outer Diameter Gas Pipe	mm	Φ9.52
	Max Distance Height	m	10
	Max Distance Length	m	20
	Note: The connection pipe applies metric diameter.		

The above data is subject to change without notice; please refer to the nameplate of the unit.

2.2 Operation Characteristic Curve

Cooling

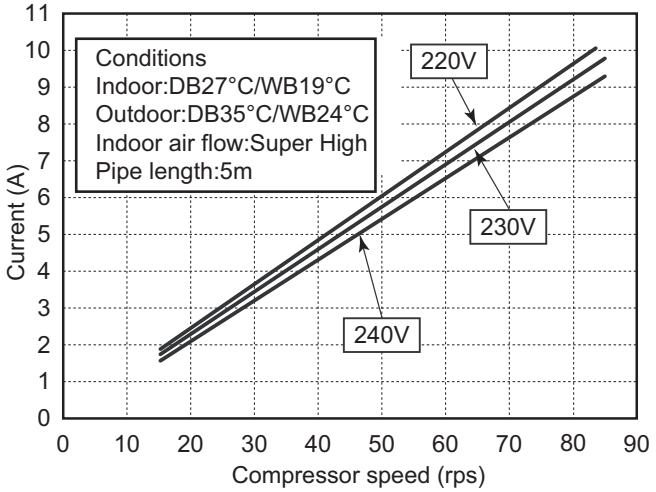

Heating

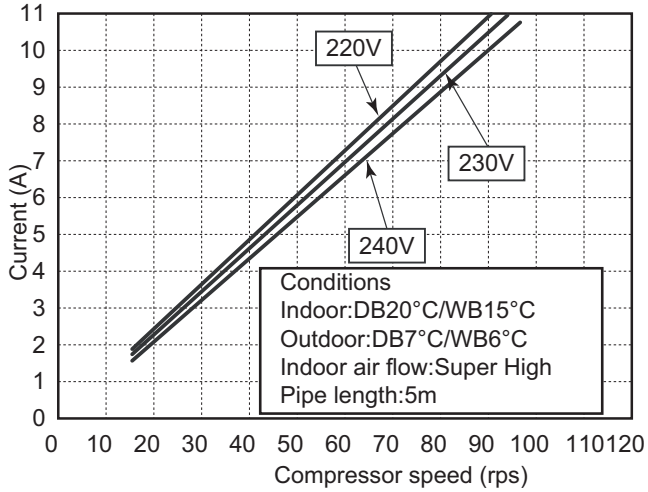

2.3 Capacity Variation Ratio According to Temperature

Cooling

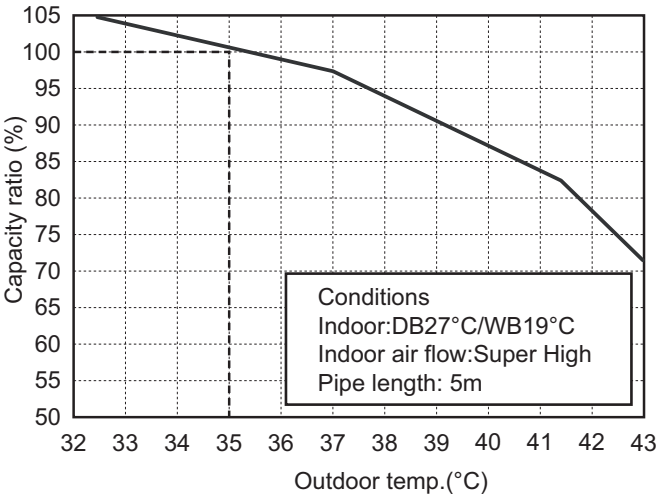

Heating

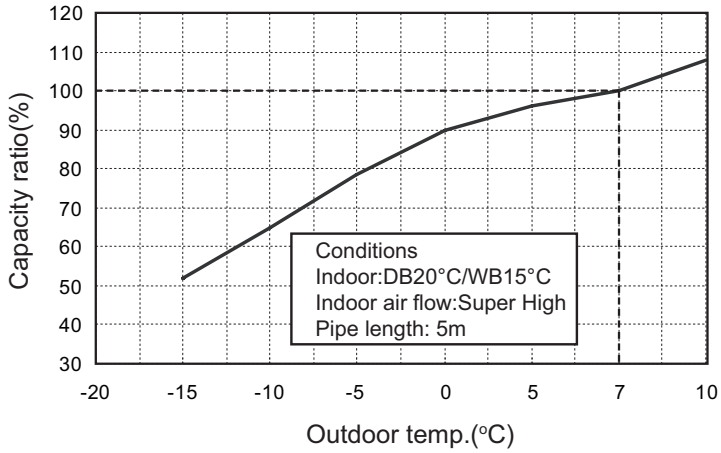

3. Outline Dimension Diagram

3.1 Indoor Unit

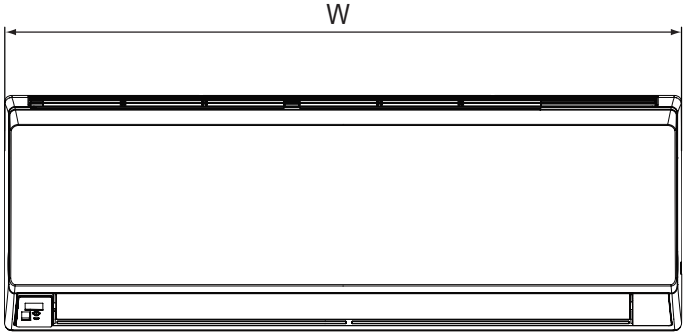

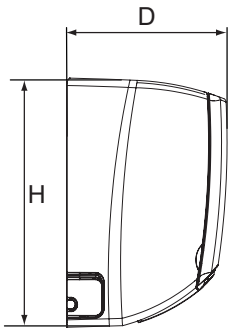

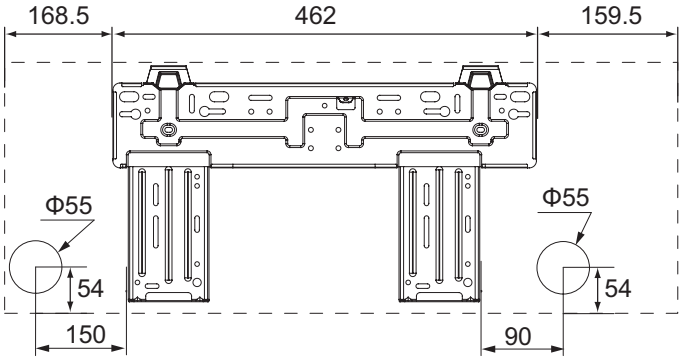

Unit:mm

Unit:mm

Models	W	H	D
12K	790	275	200

3.2 Outdoor Unit

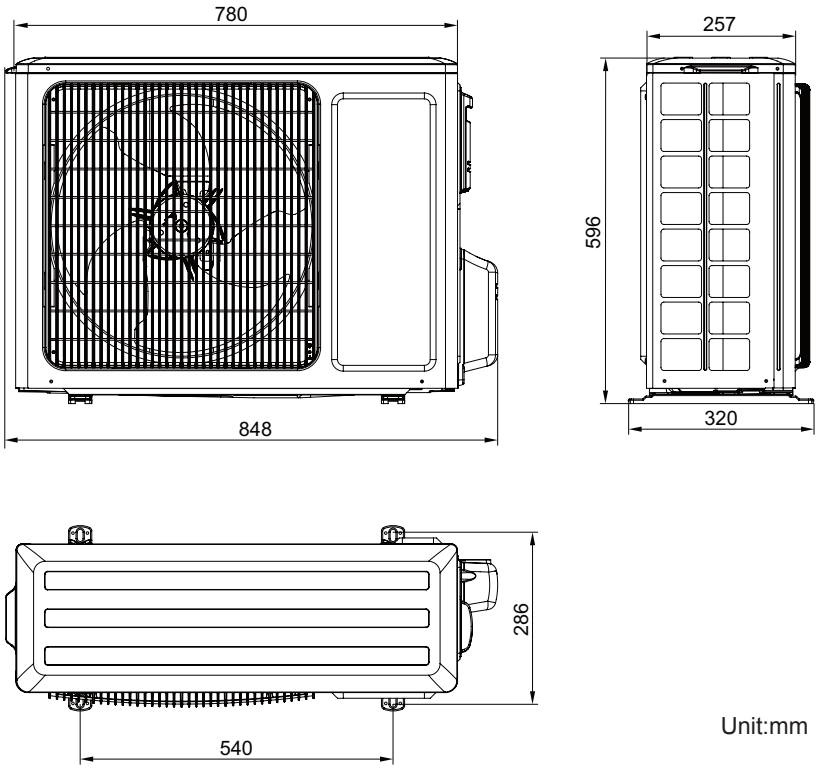

Unit:mm